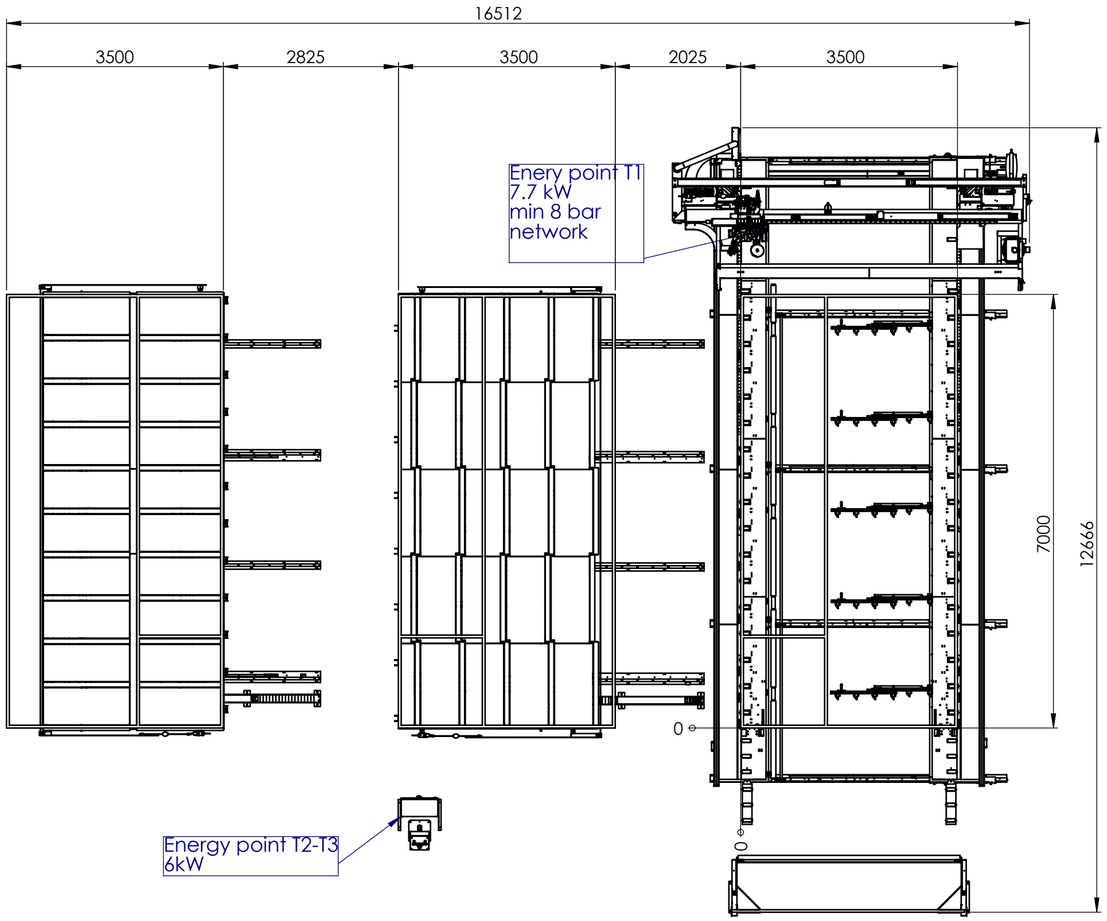

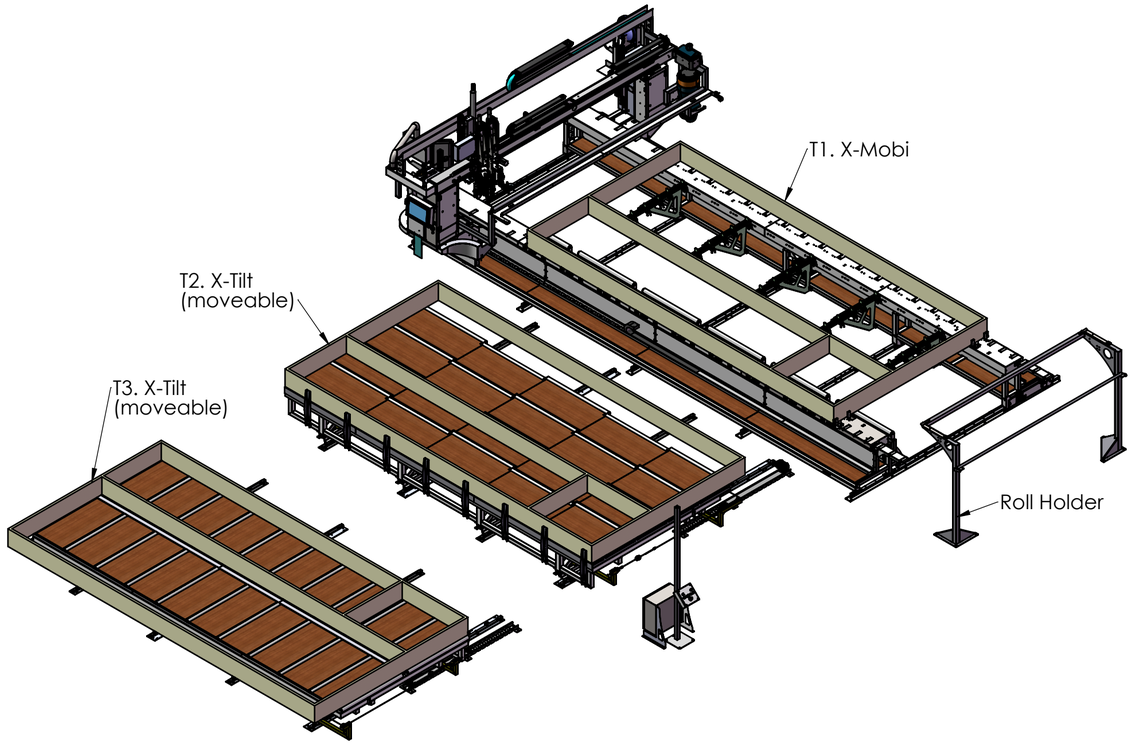

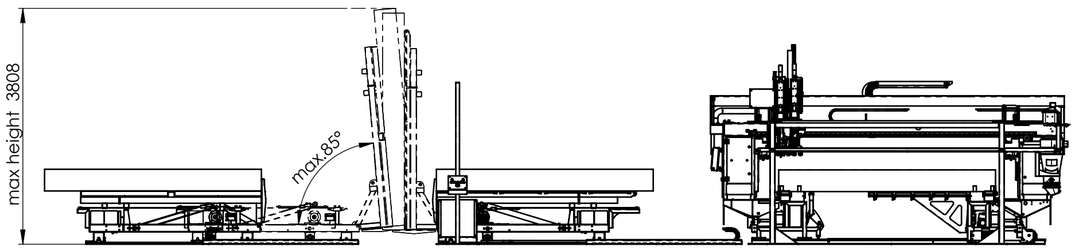

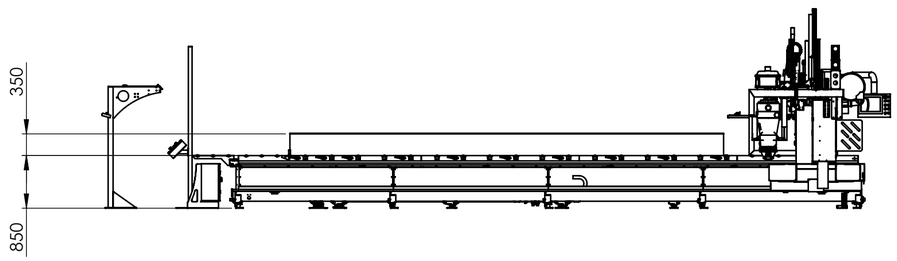

Material:			mm Thickness	RAL9002 GS Colour/ treatment:	kg Weight:
Tolerance unless otherwise stated acc. to				Name	Date
DIN ISO 2768	Part 1	Part 2	Drawn:	BvK	26-11-2020
Tolerance class	**m**	**K**	Check:	-	-
NEN-EN ISO 13920			**Remove sharp edges**		

H&M Houtbewerkingsmachines B.V.
Kopersslagersstraat 6-12
8601 WL Sneek
Tel:0515-429272
e-mail: info@h-m.nl

Title:

New Energy - HSB Lijn

Mach.nr. 2037

Drawing no. 10524-000-01

revision:

Scale: 1:70

Sheet: 1-1

A2

© All rights strictly reserved. Reproduction or issue to third parties in any form whatever is not permitted without written authority from the proprietor.