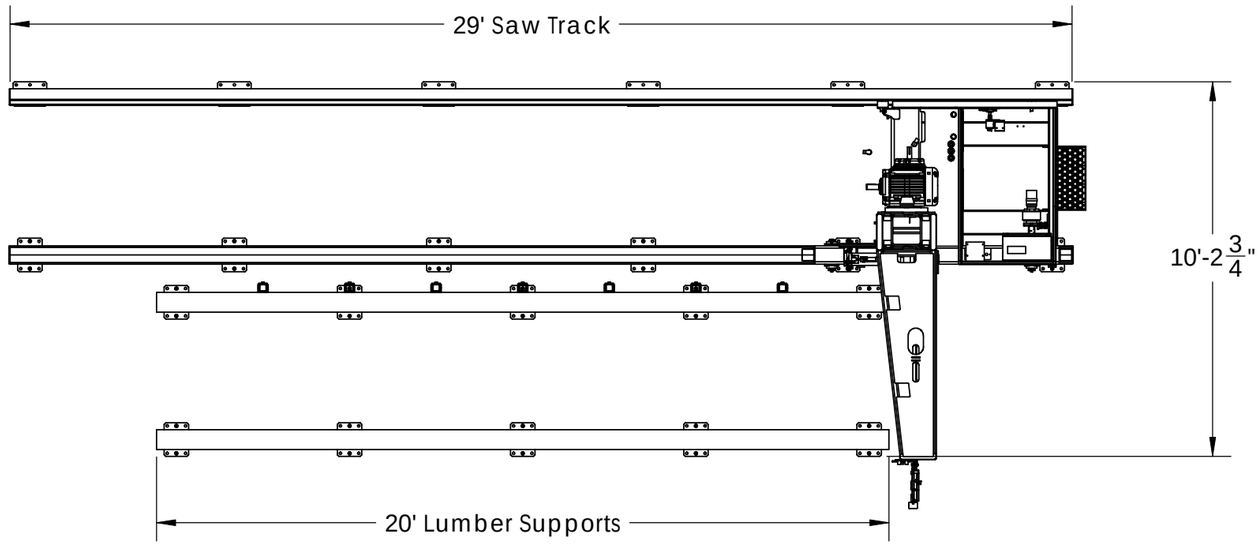

Top stroke 12 Ft. off grade

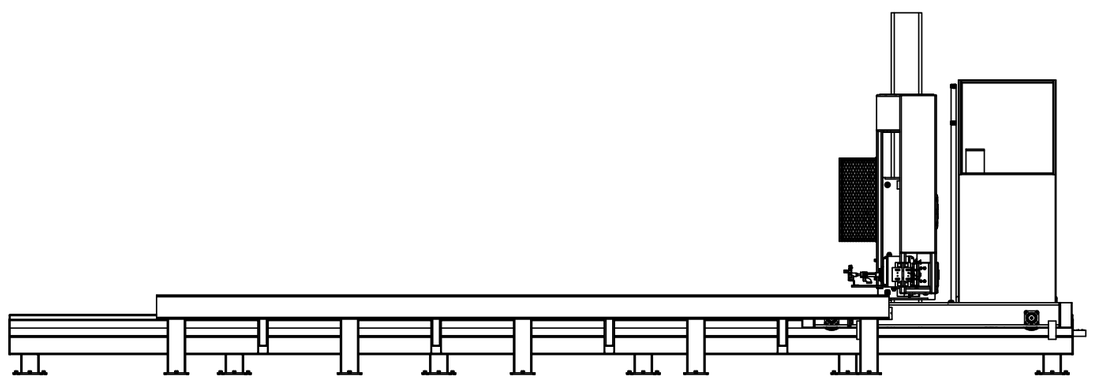

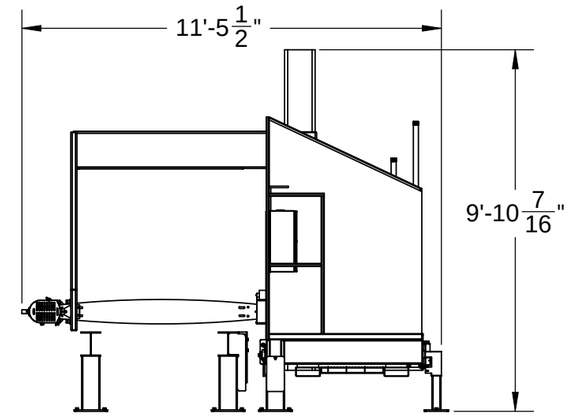

VERTICUT 2000

(20 Ft. Max Cut Length)

CLIENT S/N		
L-M Equipment Co Inc **Sandy OR USA 1-800-228-0793**		
L·M	VPC-ASSY-37	REV
		SHEET 12 OF 12